REVISIONS				
ZONE	REV.	DESCRIPTION	DATE	APPROVED
	-	PROTOTYPE	3/4/2019	
	A	RELEASE FOR MANUFACTURING	3/6/2019	

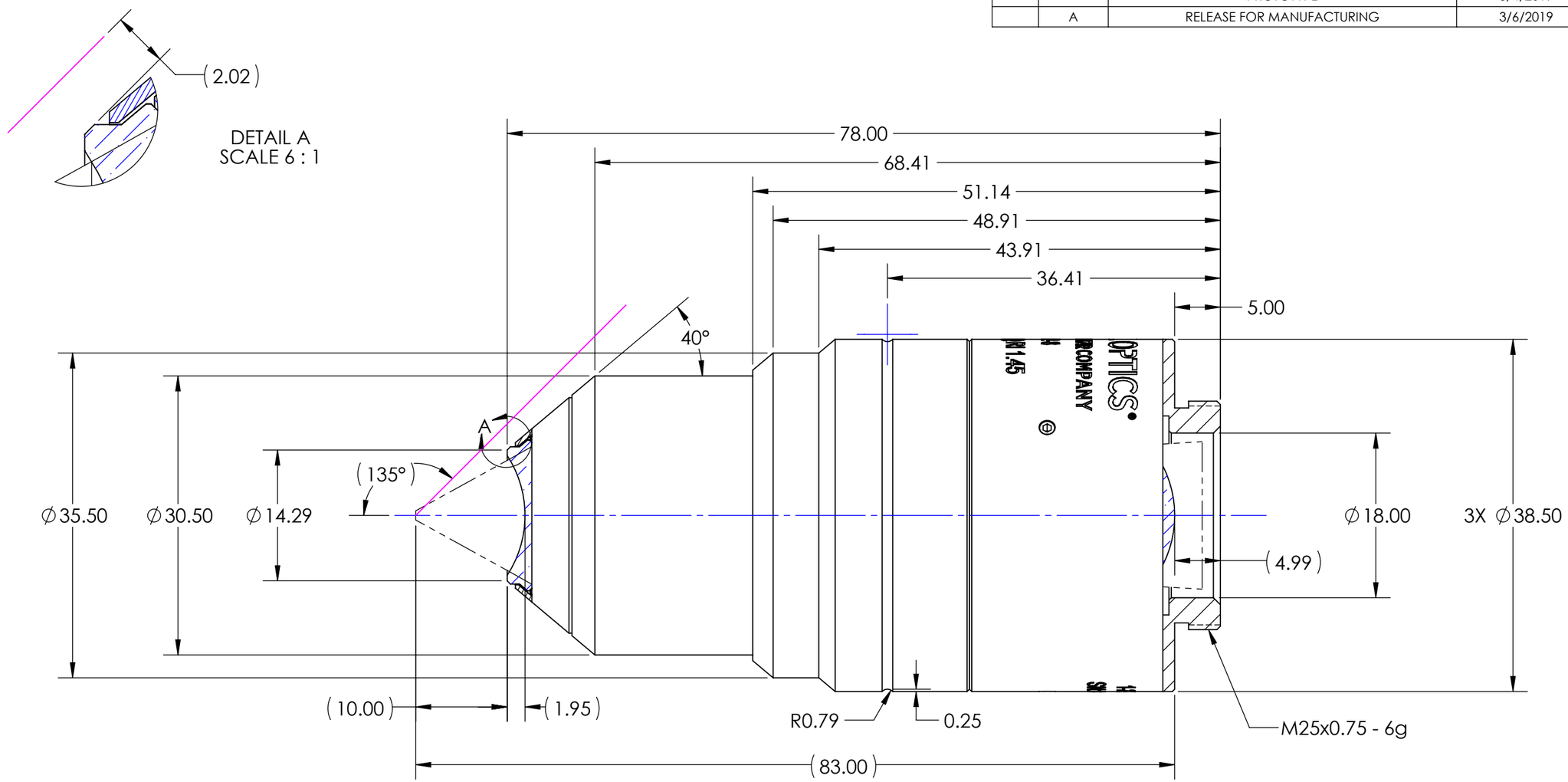

UNLESS OTHERWISE SPECIFIED UNTOLERANCED DIMENSIONS ARE IN MILLIMETERS, ARE BASIC, AND INCLUDE CHEMICALLY APPLIED OR PLATED FINISHES

ANGULAR:	±0.5°
ONE DECIMAL PLACE:	±0.25
TWO DECIMAL PLACES:	±0.13
THREE DECIMAL PLACES:	±0.013
MAX SURF. ROUGHNESS:	0.4

INTERPRET GEOMETRIC TOLERANCING PER: ASME Y14.5M, 1994

THIRD ANGLE PROJECTION

DO NOT SCALE DRAWING

PROPRIETARY AND CONFIDENTIAL

THE INFORMATION CONTAINED IN THIS DRAWING IS THE SOLE PROPERTY OF SPECIAL OPTICS. ANY REPRODUCTION IN PART OR AS A WHOLE WITHOUT THE WRITTEN PERMISSION OF SPECIAL OPTICS IS PROHIBITED.

OUTLINE

	NAME	DATE
DRAWN BY	CJR	3/4/2019
CHECKED	-	
PROJECT #	E4153	

MATERIAL: STAINLESS STEEL - AISI 316

FINISH: PASSIVATED PER ASTM A967

SPECIAL OPTICS® A NAVITAR COMPANY
Special Optics Inc.
3 Stewart Court
Denville, NJ 07885

TITLE: OBJECTIVE ASSEMBLY 54-12-8 @ 480-1000nm

SIZE	PART NUMBER	REV
B	1-29478	A

SCALE: 2:1 | WEIGHT: 379.15g | SHEET 2 OF 2